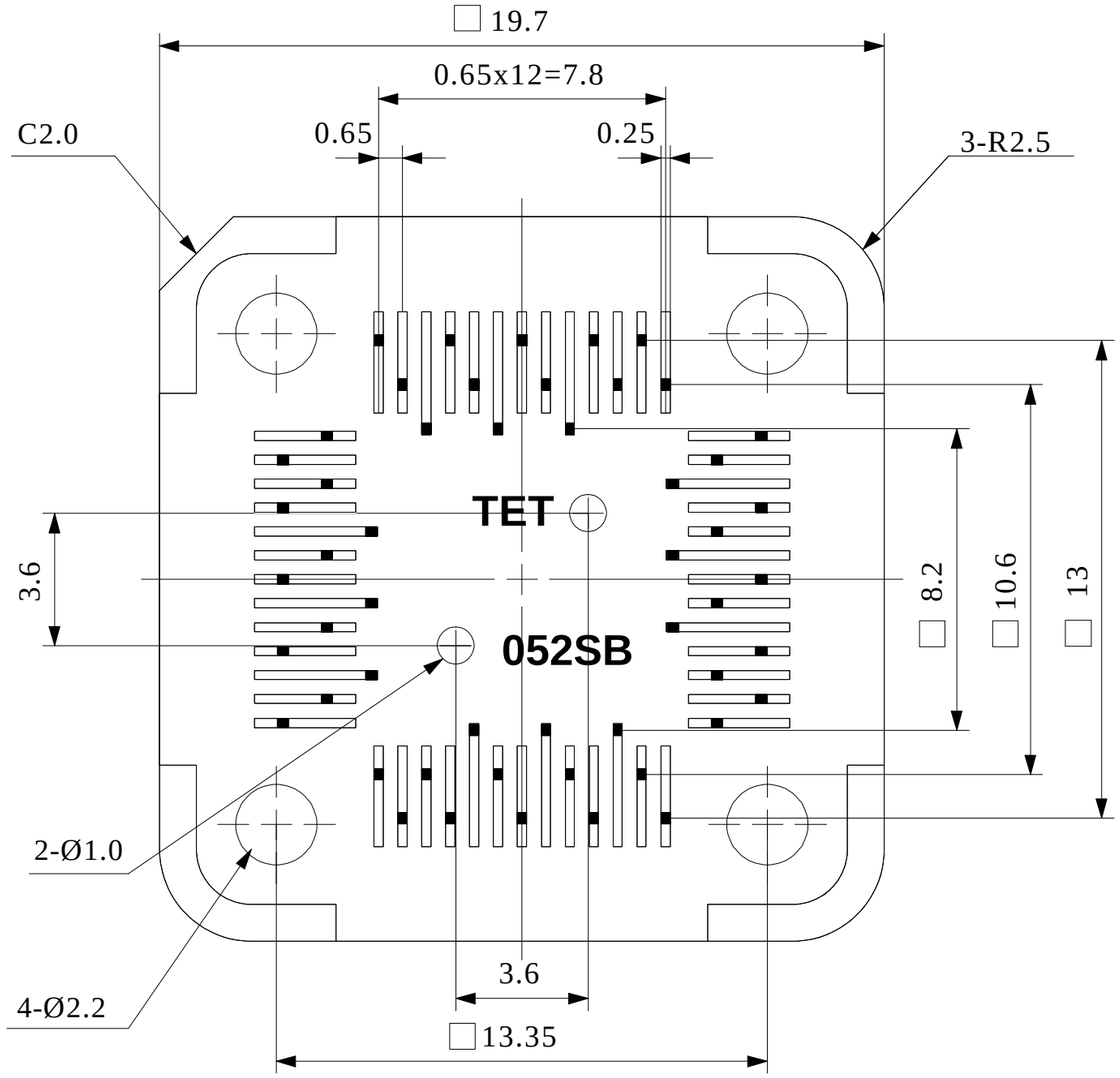

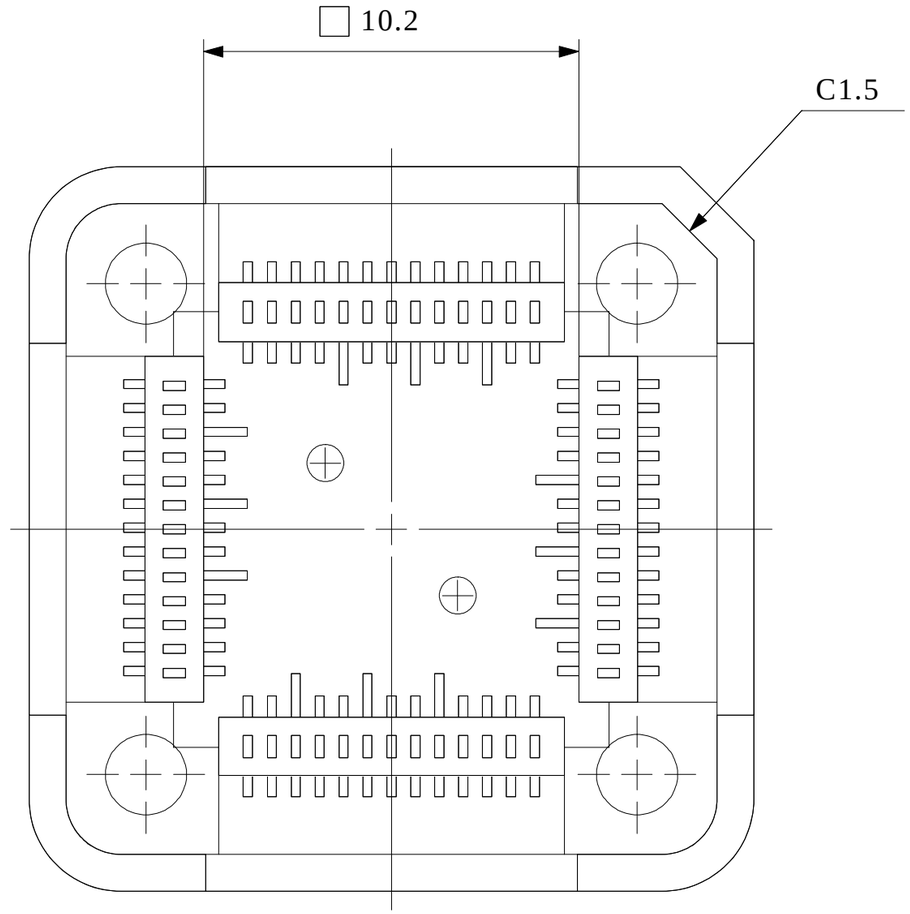

* Applicable size of IC package : IC body size 10.0 x 10.0 mm
IC outer size 12.0 x 12.0 mm

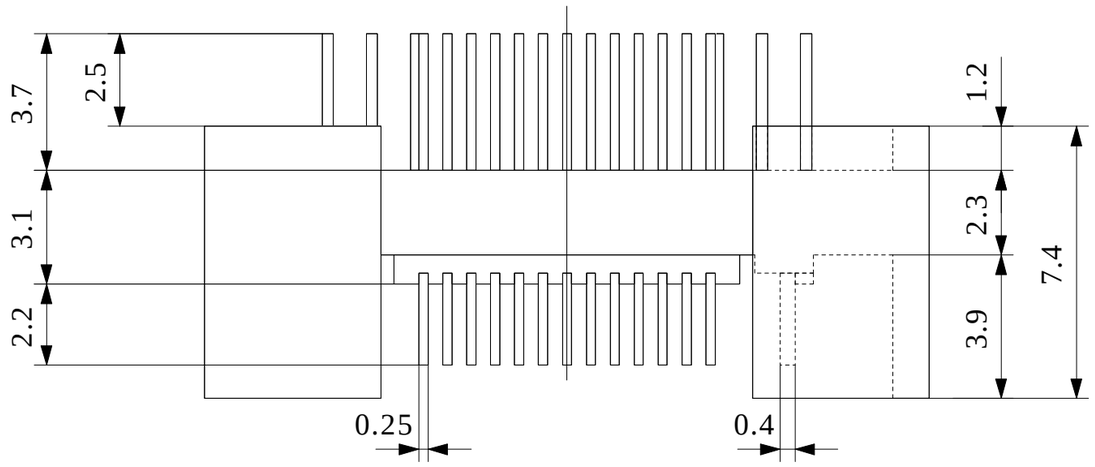

Part No.	**YQPACK052SB**
IC package	Square
Pin count	52Pin
Lead pitch	0.65mm
Unit : mm	Design : M.H
TET TOKYO ELETECH CORP.	