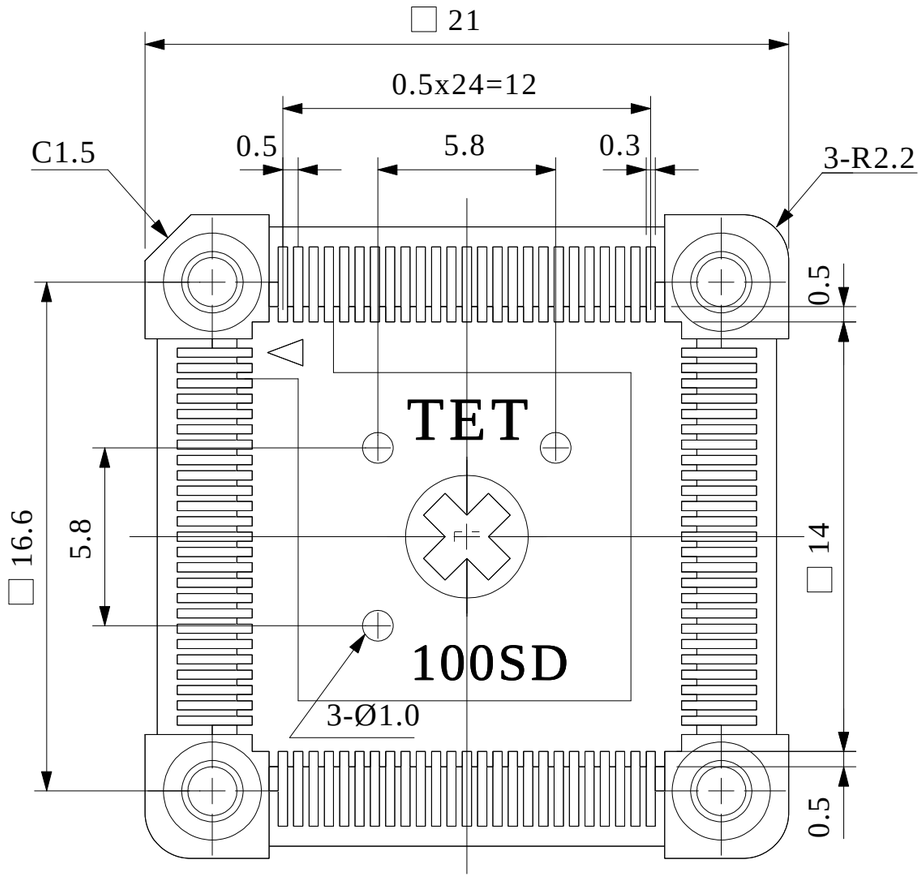

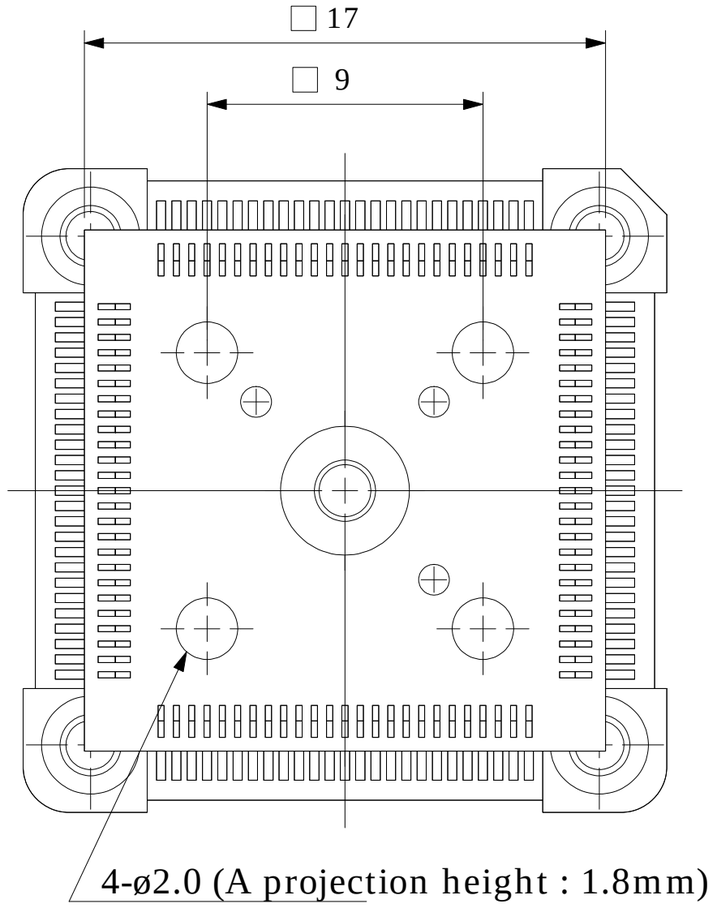

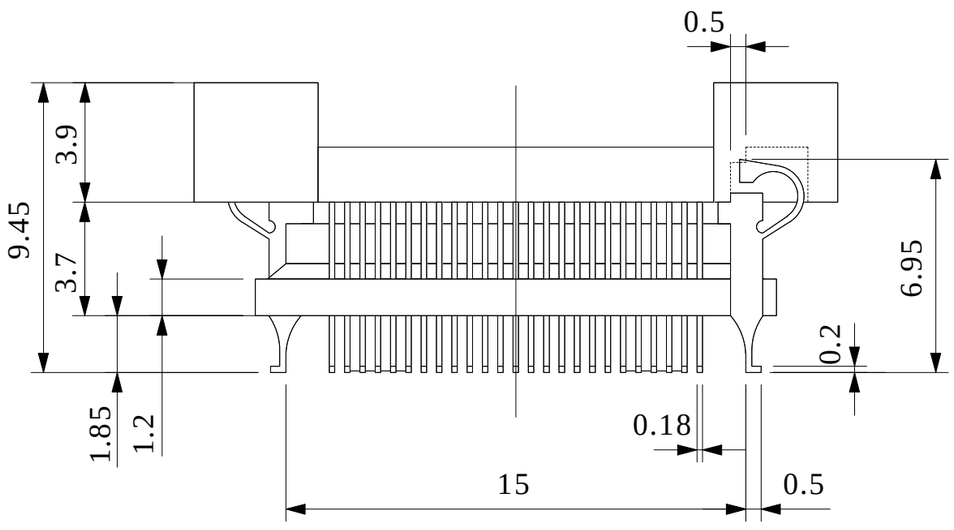

Part No.	**NQPACK100SD**
IC package	Square
Pin count	100Pin
Lead pitch	0.5mm
Unit : mm	Design : M.H
TET TOKYO ELETECH CORP.	