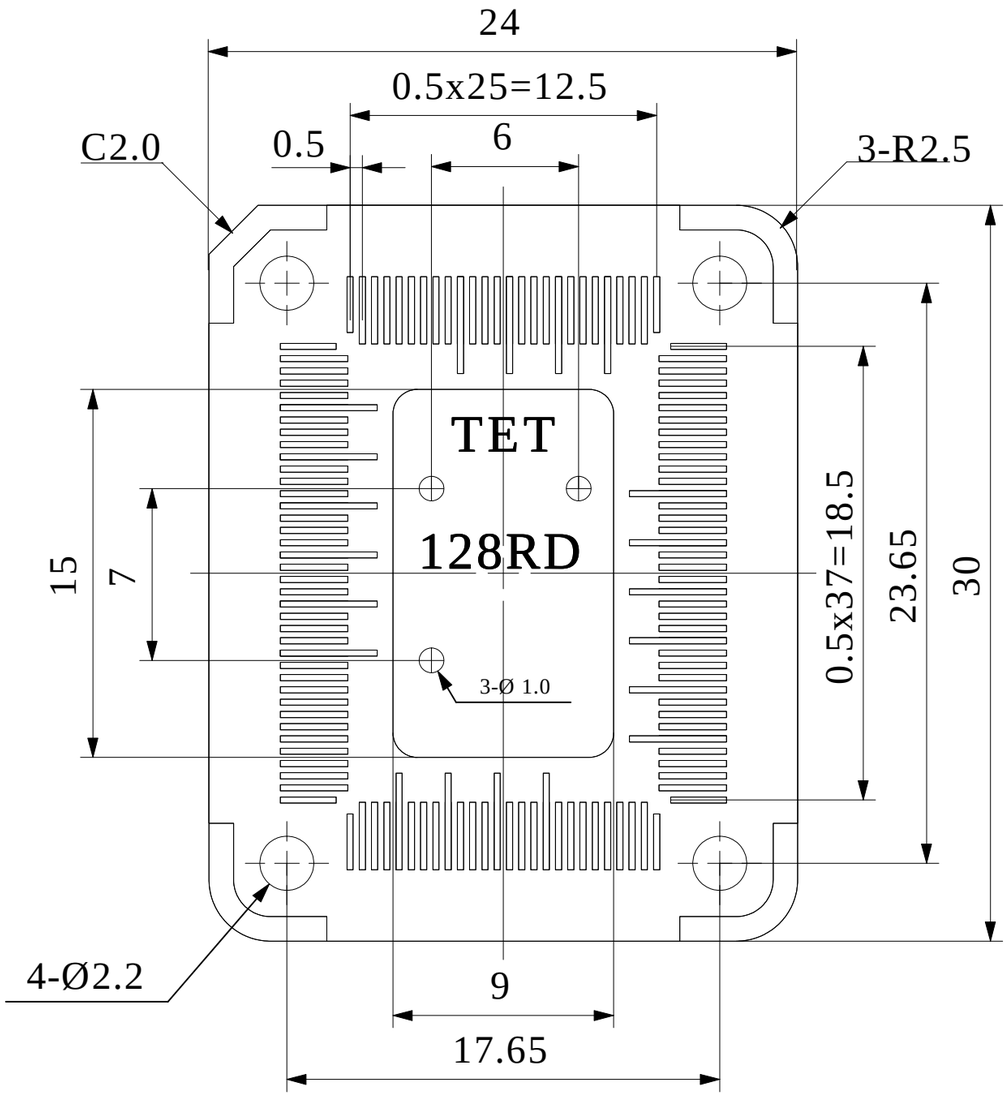


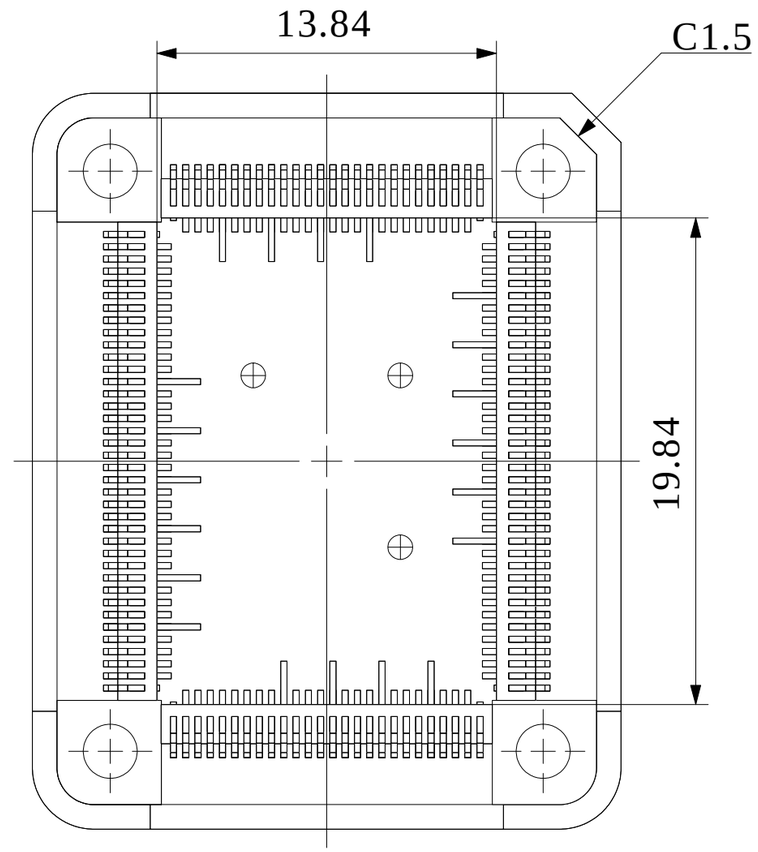


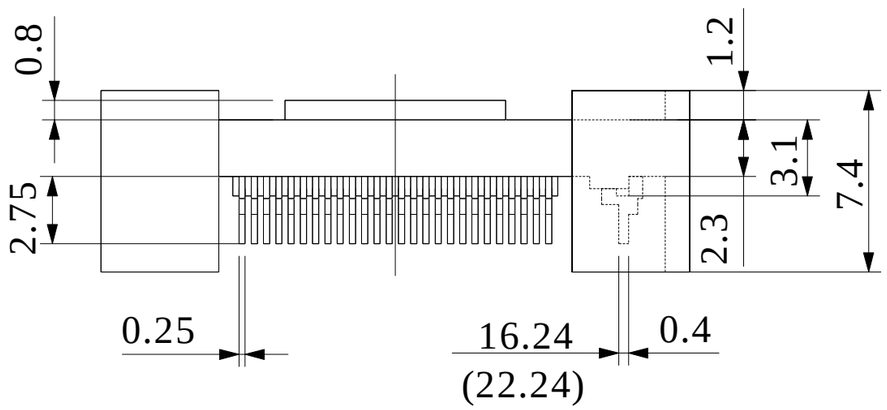


| | | |
|---|---|---|
| Part No. | HQPACK128RD172 | |
| IC package | Square | |
| Pin count | 128Pin | |
| Lead pitch | 0.5mm | |
| Unit : mm | | Design : M.H |
| ***TET*** TOKYO ELETECH CORP. | | |