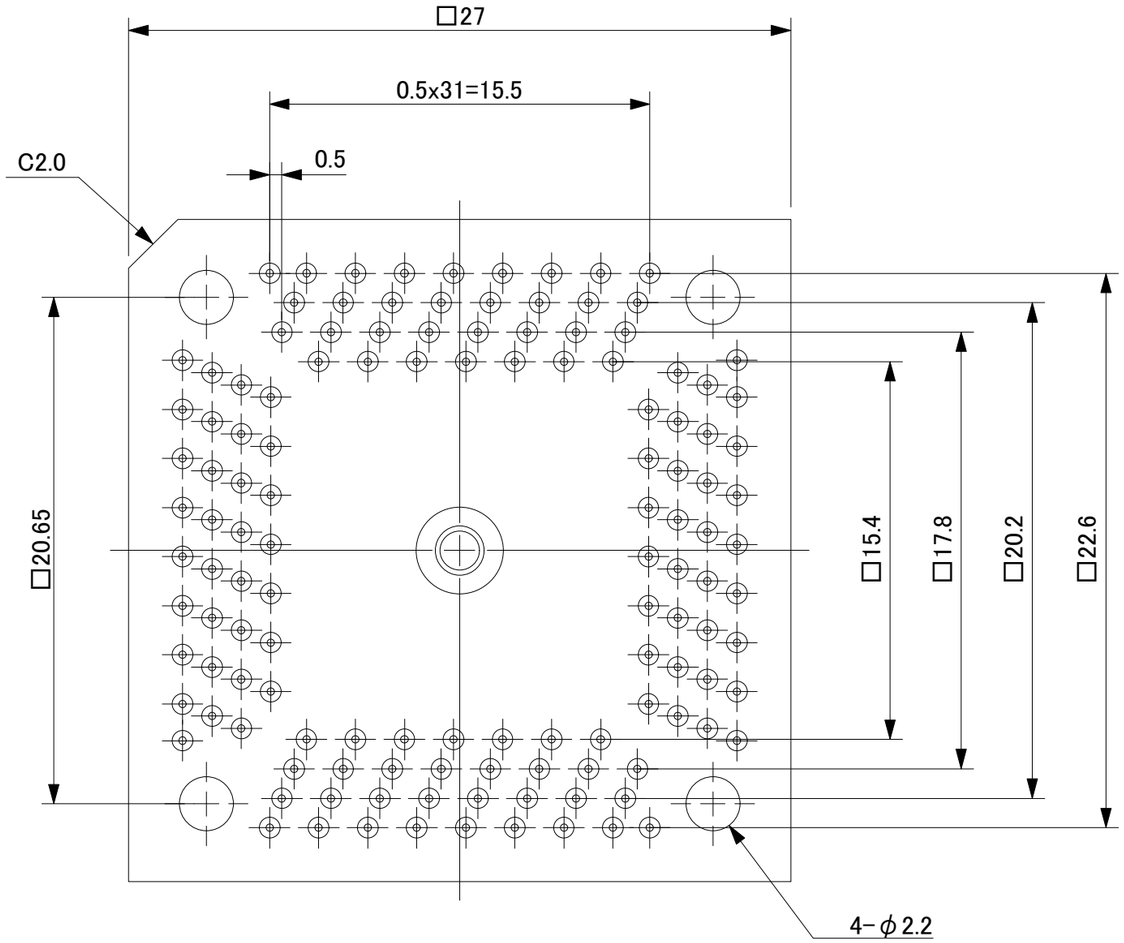

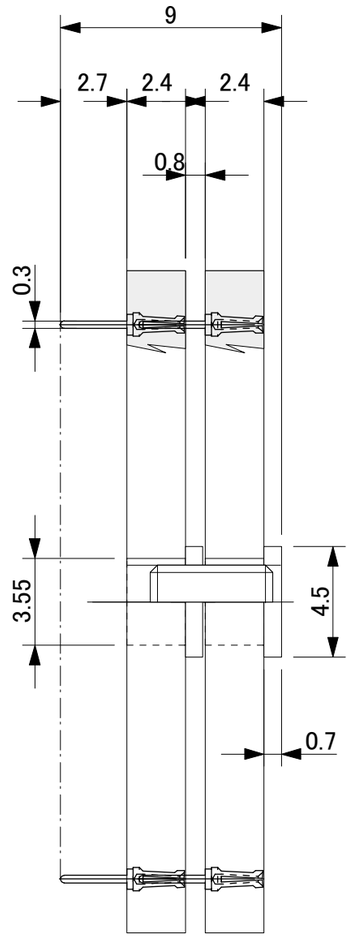

Part No.	YQSOCKET128SDF-2	
IC package	Square	
Pin count	128Pin	
Lead pitch	0.5mm	
Unit : mm		Design : S.M
TET TOKYO ELETECH CORP.		