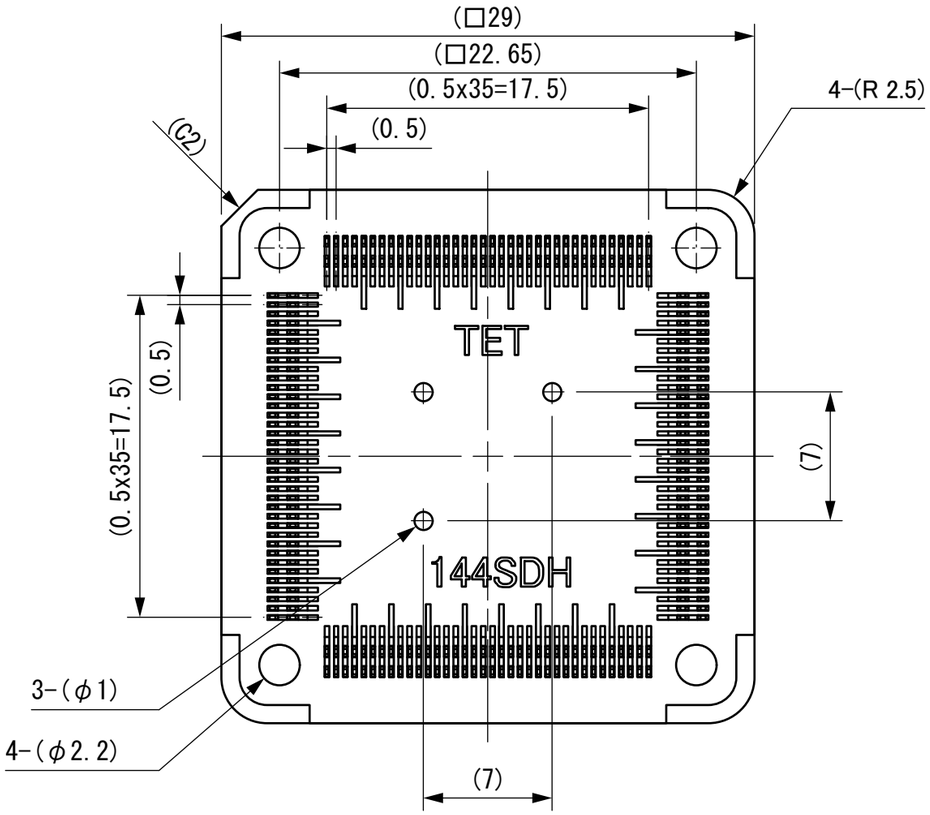


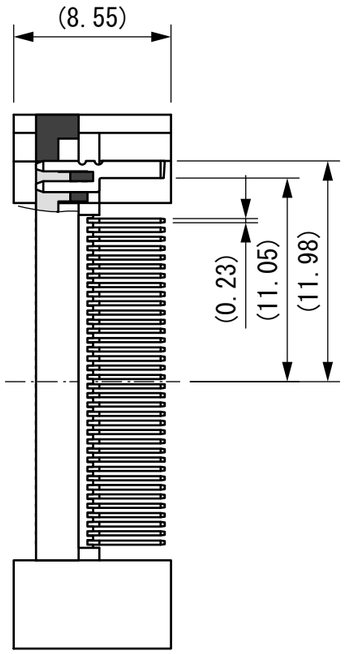


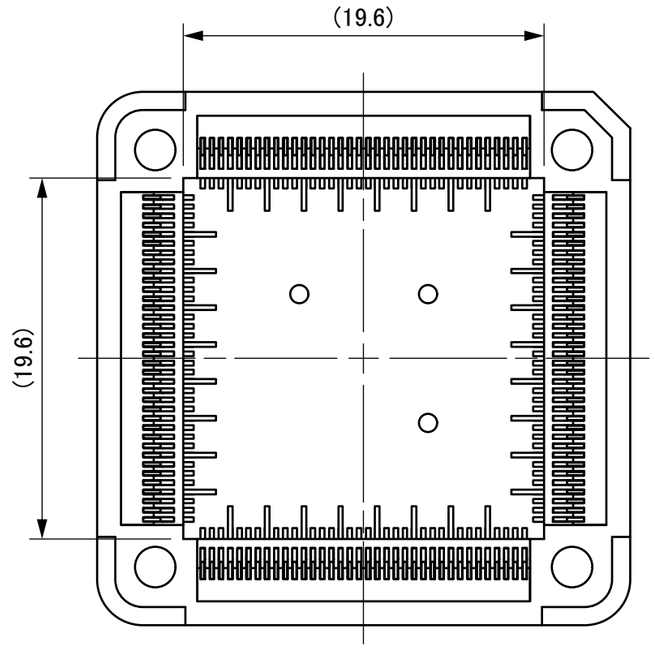


| | |
|---|---|
| Part No. | **HQPACK144SD226-H** |
| IC package | Square |
| Pin count | 144Pin |
| Lead pitch | 0.5mm |
| Unit | mm |
| Design / Date | M.Miura / Jun.11.'07 |
| *TET* TOKYO ELETECH CORP. | |