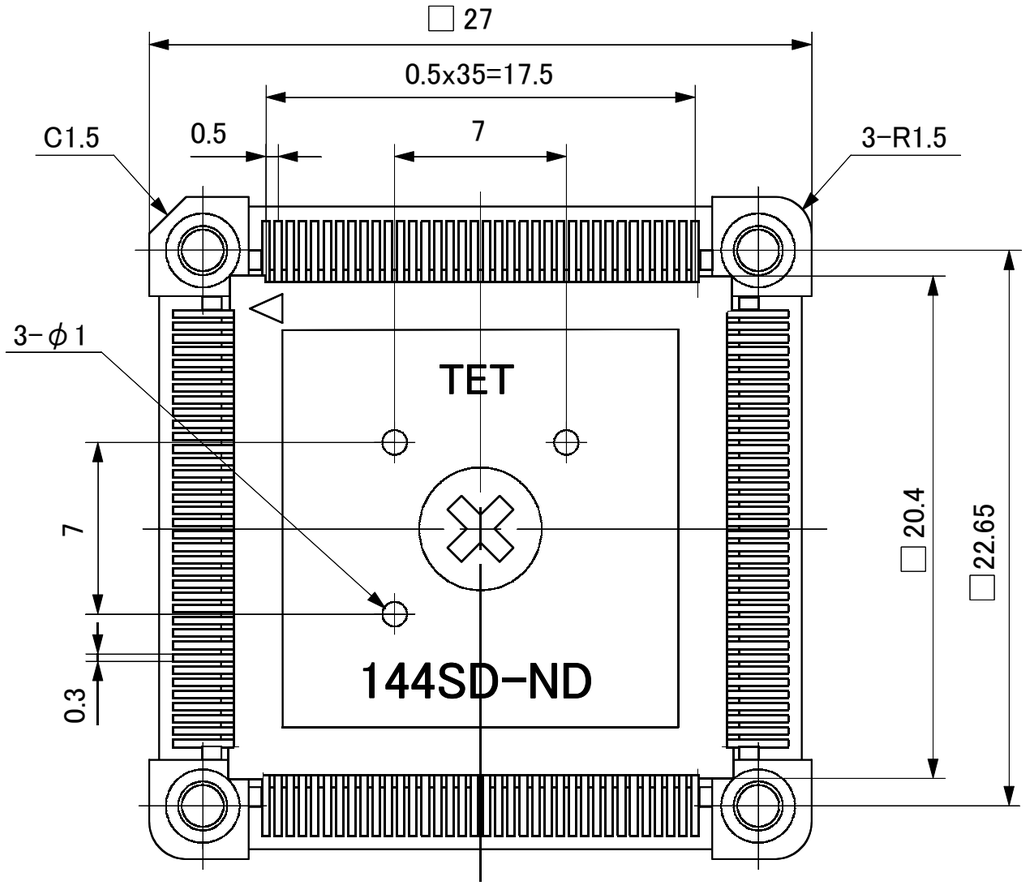

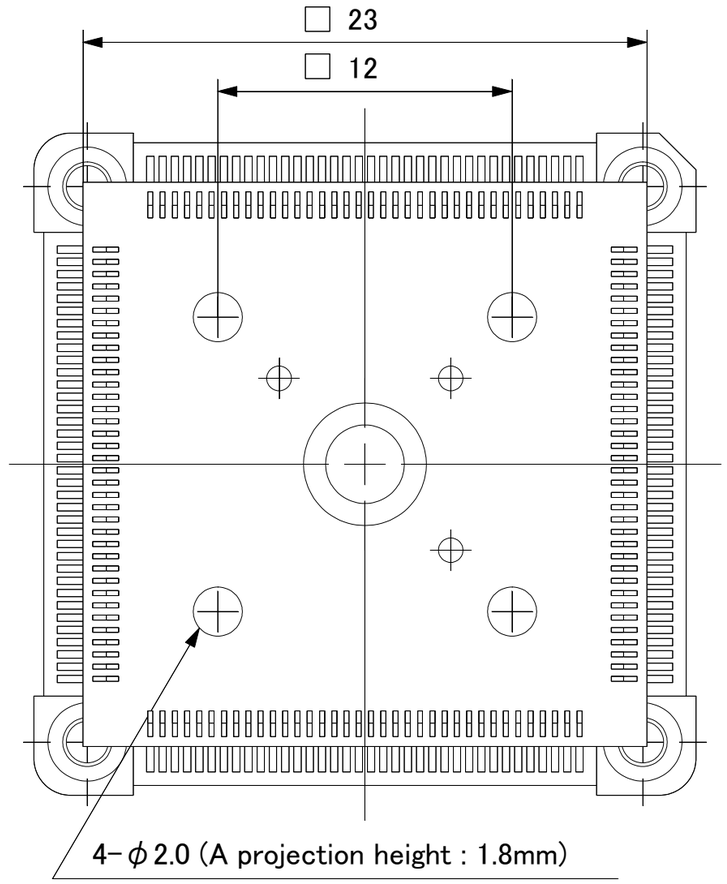

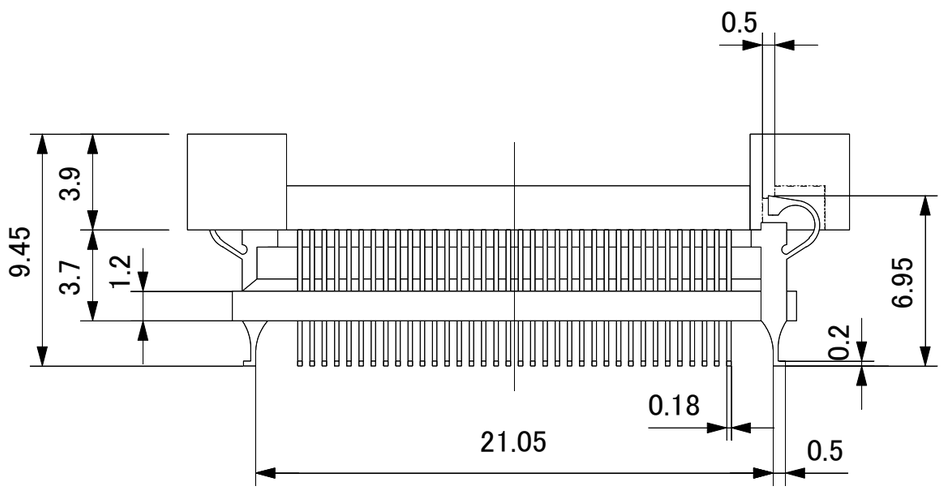

Part No.	NQPACK144SD-ND
IC package	Square
Pin count	144pin
Lead pitch	0.5mm
Unit	mm
Design / Date	H.Suzuki/Feb.14.'07
TET TOKYO ELETECH CORP.	