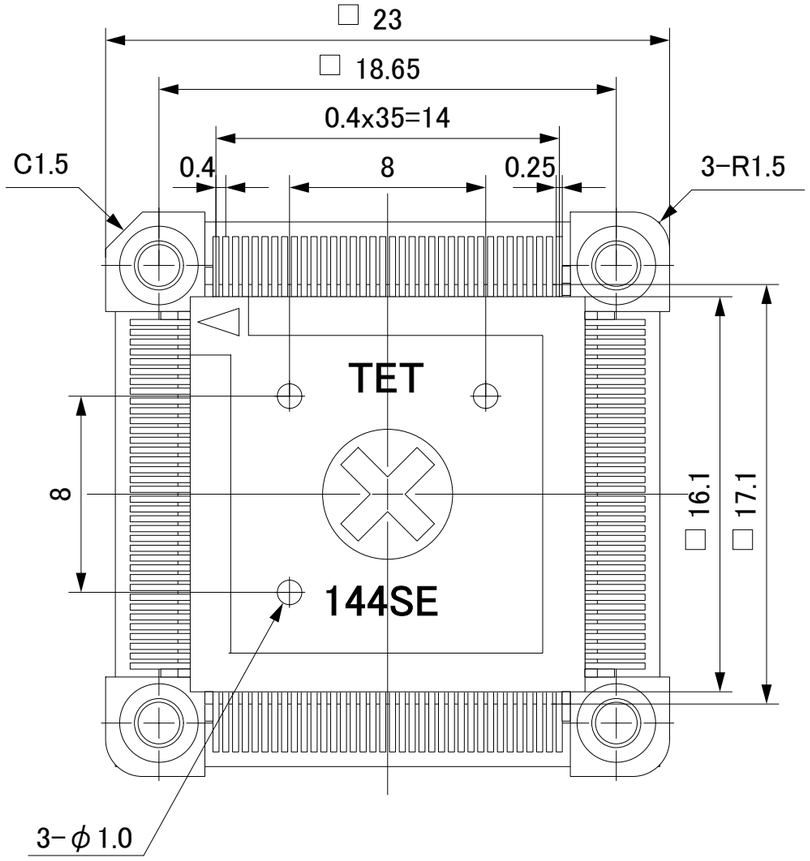

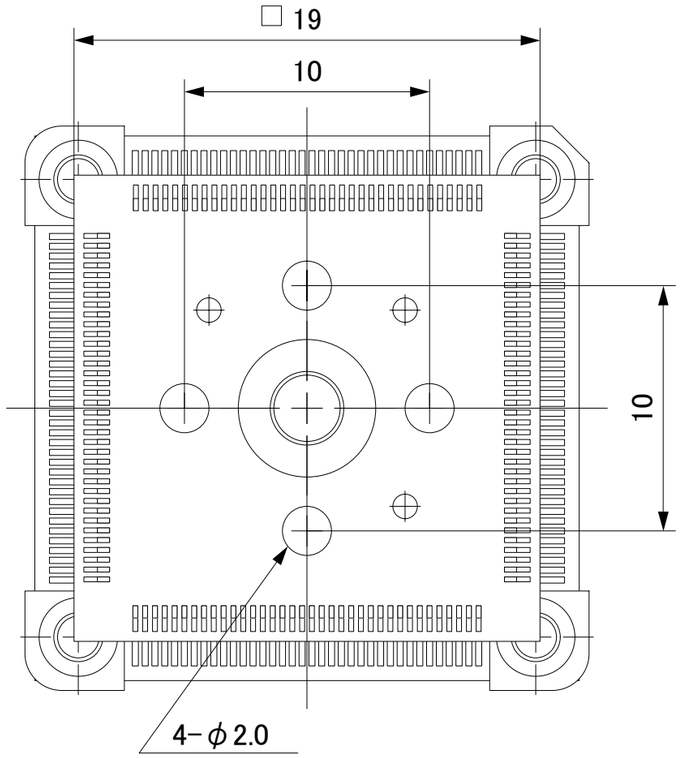

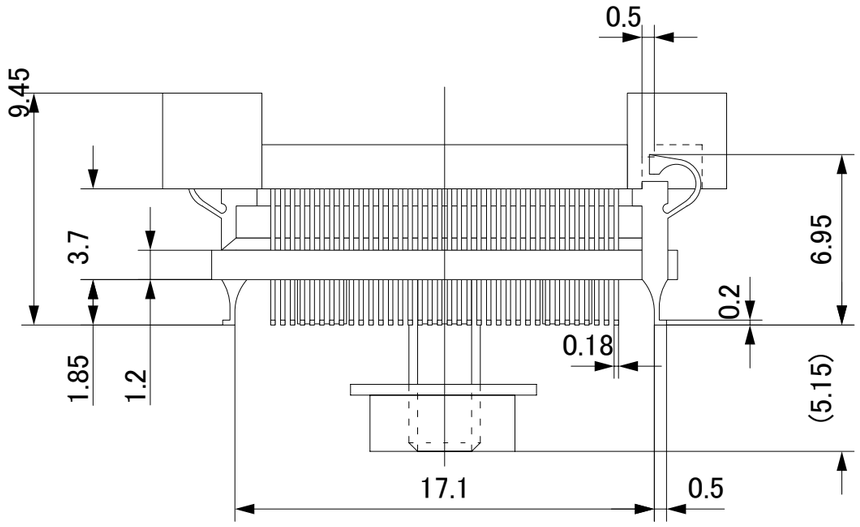

Part No.	NQPACK144SE-SL
IC package	Rectangle
Pin count	144Pin
Lead pitch	0.4mm
Unit	mm
Design / Date	H.Suzuki/May.16.'06
TET TOKYO ELETECH CORP.	