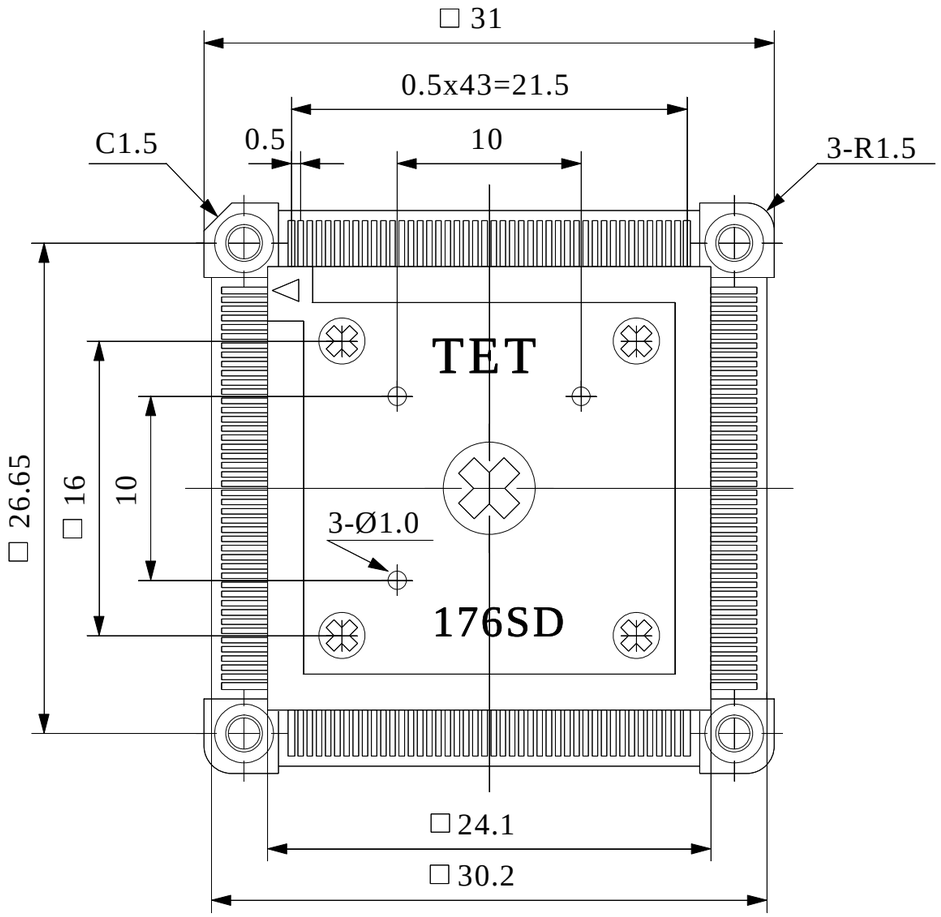

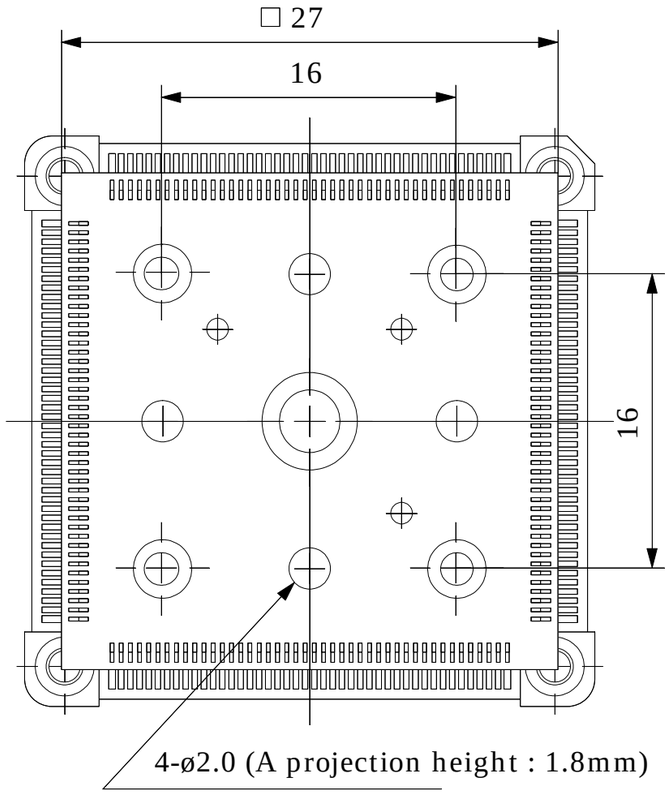

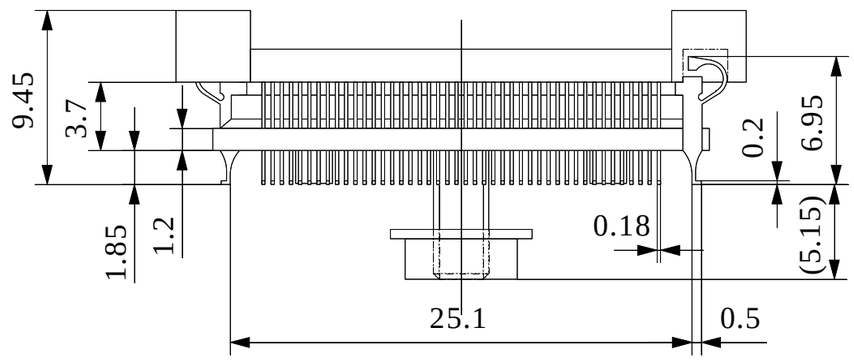

Part No.	NQPACK176SD-SL
IC package	Square
Pin count	176Pin
Lead pitch	0.5mm
Unit : mm	Design : M.H
TET TOKYO ELETECH CORP.	