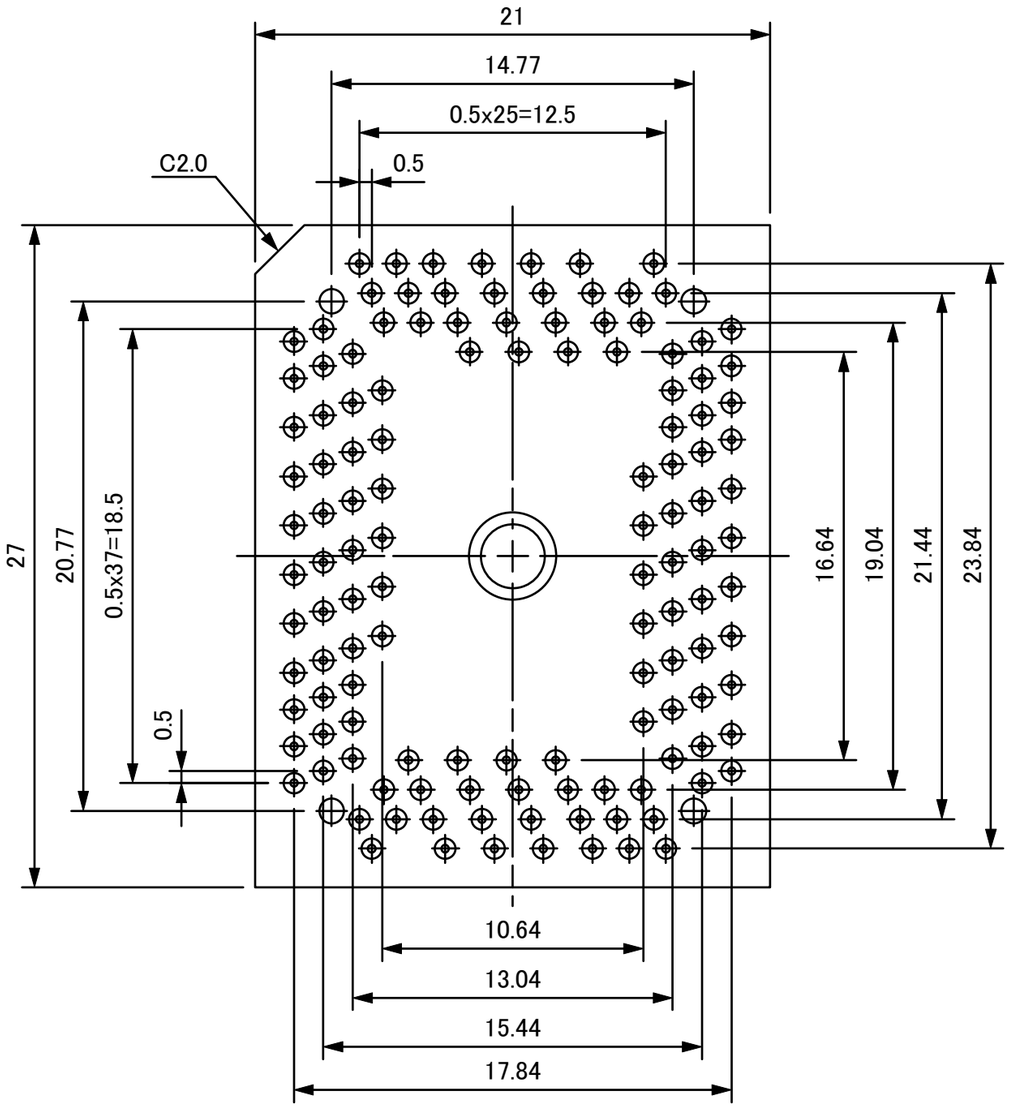

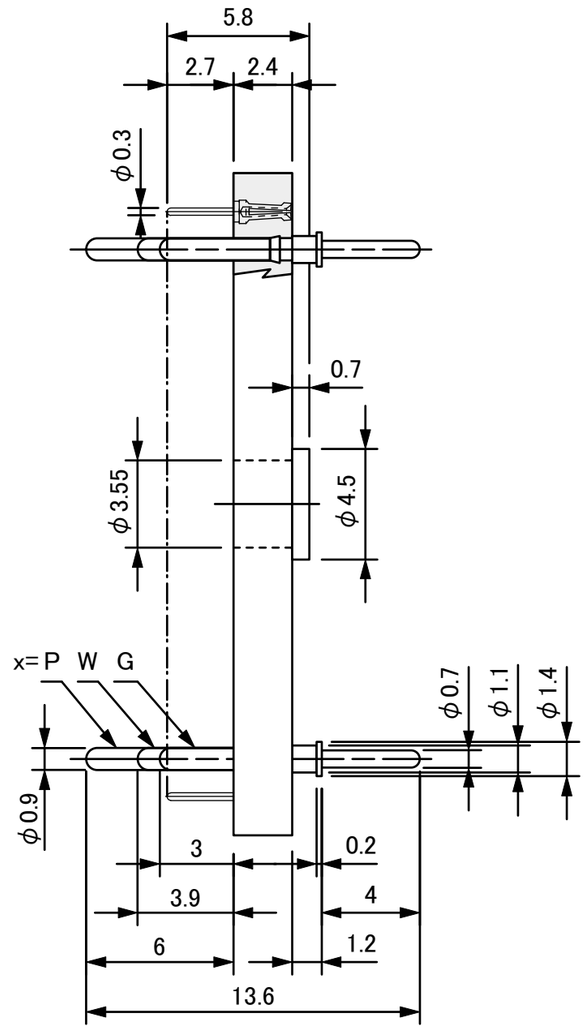

Part No.	TQSOCKET128RDx
IC package	Rectangle
Pin count	128pin
Lead pitch	0.5mm
Unit	mm
Design / Date	S.M / Feb 18.'19
TET TOKYO ELETECH CORP.	

Guide pin
x=G,W,P